Installation Instructions - Nanodyne Replacement for Olympus BX51 Bottom Illuminator

Step 1. Refer to the photos below to verify that you need the Olympus BX51 Bottom Illuminator. If you need the top illuminator you need to purchase PN 10394 Olympus BX50-51 Top Illuminator Full System.

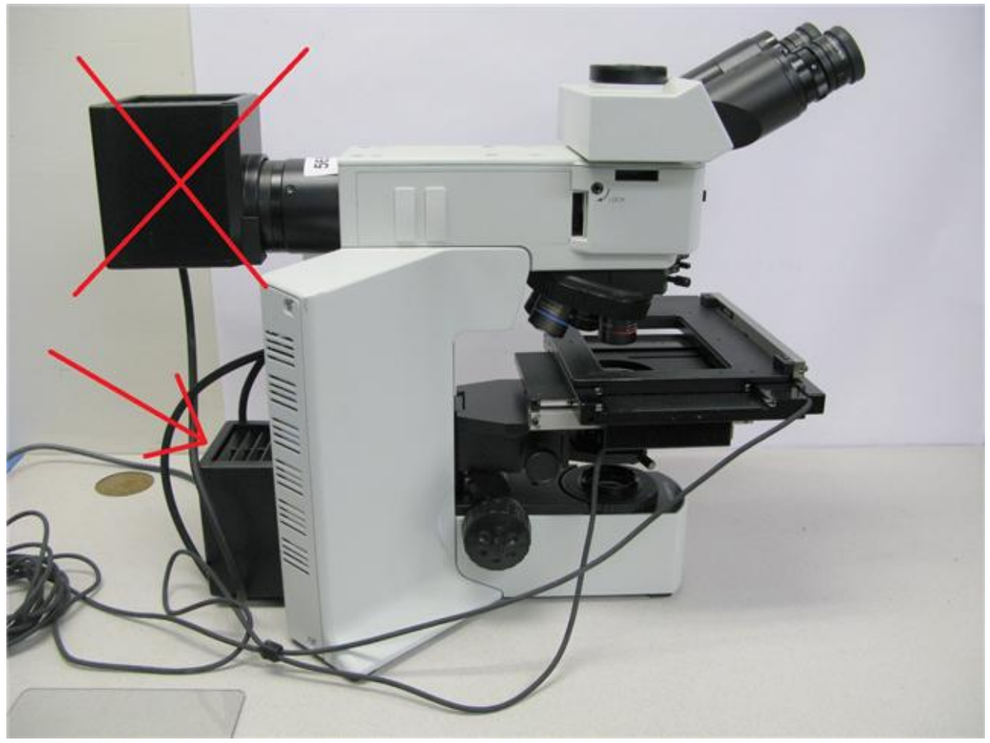

PN 10413 described in this document is for replacing the lower illuminator identified by arrows in the above pictures. The original intensity adjustment pot is compatible with the Nanodyne illuminator, but we provide a new replacement pot which we recomend using to prevent problems due to wear of the original pots.

The power switch, photo pre-set and intensity bar graph of the original unit are left in place, but are obsolete and not used.

Important Note 1: This illuminator is intended to replace halogen (white light) illuminators. It is NOT intended as a replacement for mercury vapor (UV) lamps used for fluorescence.

Important Note 2: The photos shown on the following pages were taken using stripped down boneyard microscopes. Parts missing from the photos do not neccesarily indicate that they should be removed.

READ THE INSTRUCTIONS.

Han-Seung Yang	2/8/2019
PN 10413 Olympus BX51 Bottom Illuminator System Installation	REV 5
SHEET 1 OF 11	

Nanodyne Replacement Illuminator for Olympus BX51 Bottom: Included Items

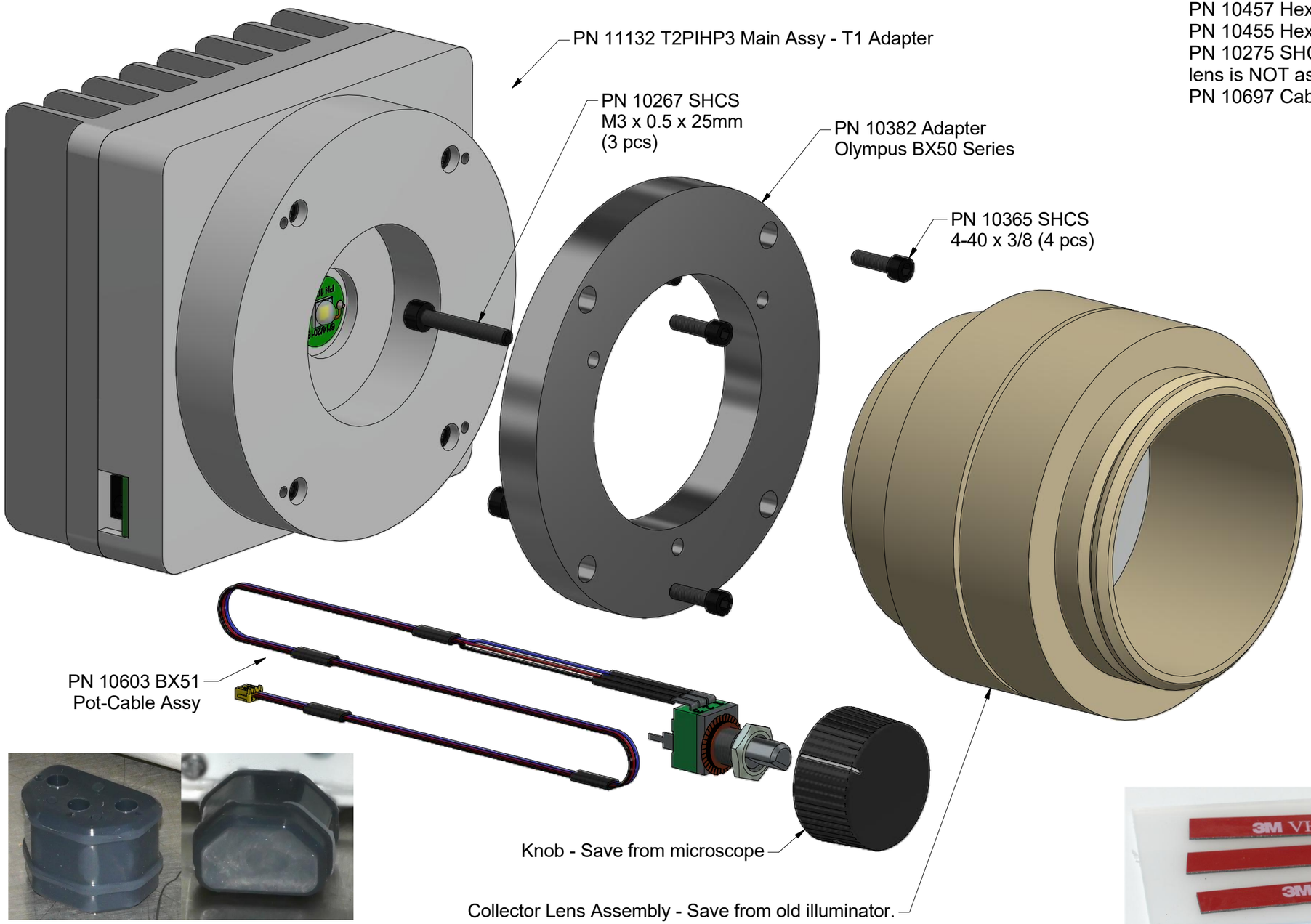

Additional Items Included But Not Shown:

PN 10457 Hex Key 2.5mm Short Arm (for M3 screws)
PN 10455 Hex Key 3/32 Ball End L-Key Stubby (for 4-40 screws)
PN 10275 SHCS M3 x 0.5 x 8mm (3pcs) - in case your condenser lens is NOT as pictured on sheet 3.
PN 10697 Cable Ties.

PN 11163 Power Supply 5V 2.1A and PN 10734 Power Cable 1.35mm ID/3.5mm OD x USB A 6 ft.

The illuminator may be powered by plugging the cable into the power supply provided, or into a suitable USB port on a computer or other device.

PN 10736 Rubber plug to block unused AC power recepticle.

3M VHB tape to secure pot cable

Power supplies are subject to substitution without notice due to availability issues and changes in regulations.

Han-Seung Yang	2/8/2019	
PN 10413 Olympus BX51 Bottom Illuminator System Installation		REV 5
	SHEET 2 OF	11

BX51 Bottom Illuminator Replacement Instructions

Sheet 3: Salvage the original collector lens assembly from the lamp housing.

Loosen the screw as shown, using a 3mm hex key (not provided).

Lift off the top of the lamp housing to access the condenser lens.

If your lamp housing is NOT as pictured above, and the collector lens is attached with socket head screws rather than phillips, you probably have a top illuminator installed at the bottom. You can continue with the installation, but you will need to use the alternate 8mm long PN 10275 screws to attach the collector lens to the Nanodyne adapter (PN 10382).

Han-Seung Yang	2/8/2019	
PN 10413 Olympus BX51 Bottom Illuminator System Installation		REV 5
	SHEET 3 OF	11

BX51 Bottom Illuminator Replacement Instructions

Sheet 4: Salvage the original collector lens assembly from the lamp housing (continued from sheet 3), and attach adapter.

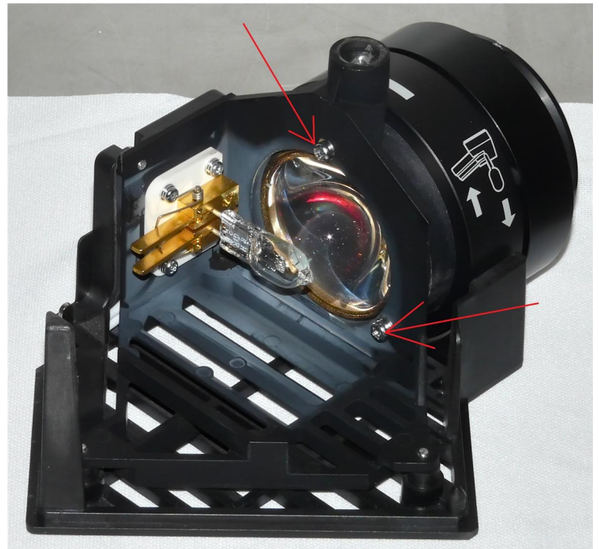

(1) Remove the three phillips head screws to remove the collector lens. (one screw is hidden behind the bulb)

(2) Don't let the collector lens fall out of the housing after removing the screws.

(3) Ready to attach adapter to collector lens assembly.

(4) Attach the adapter to the collector lens using the three 25mm long M3 screws. Tighten with the included 2.5 mm hex key.

(5) Collector lens/adapter assembly ready to attach to the Nanodyne illuminator.

Han-Seung Yang	2/8/2019	
PN 10413 Olympus BX51 Bottom Illuminator System Installation		REV 5
	SHEET 4 OF	11

BX51 Bottom Illuminator Replacement Instructions

Sheet 5: Attach adapter/collector assembly to illuminator.

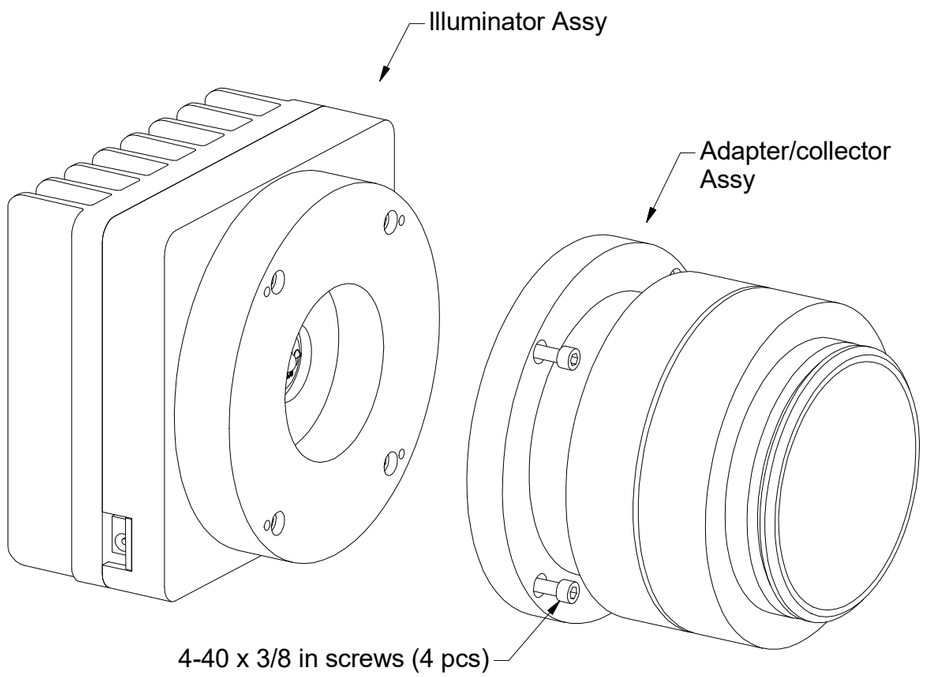

Exploded View

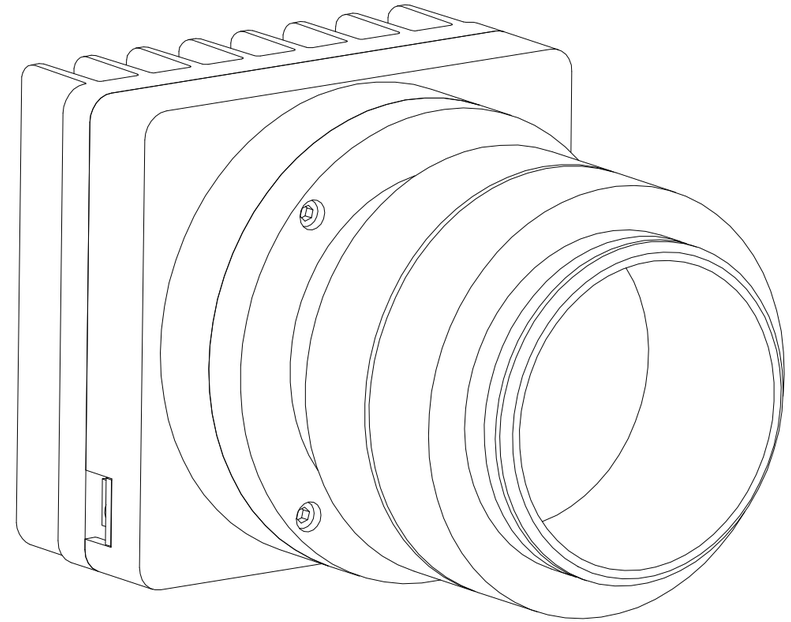

Completed Illuminator assembly

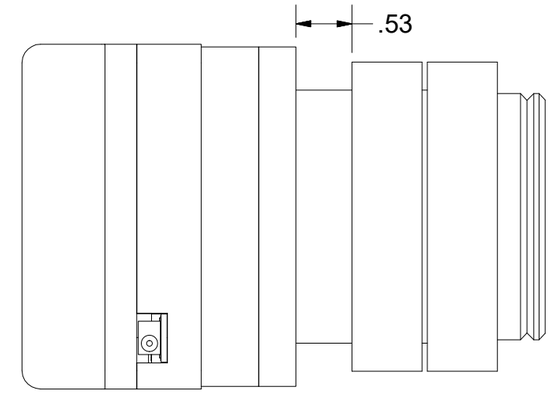

Completed Illuminator assembly
Side View

Attach the collector lens/Adapter assembly to the Illuminator using the four 4-40 x 3/8 inch screws. Direct access to the screws is partially obstructed by the 2.915 inch diameter of the collector lens, but using the ball end of the special hex key allows the key to be angled enough to clear the lens. That allows the four screws to be quickly snugged down. Then use the short end (which will fit in the 0.53 inch space between the Adapter and the full diameter portion of the lens) to secure the screws. See photos at right.

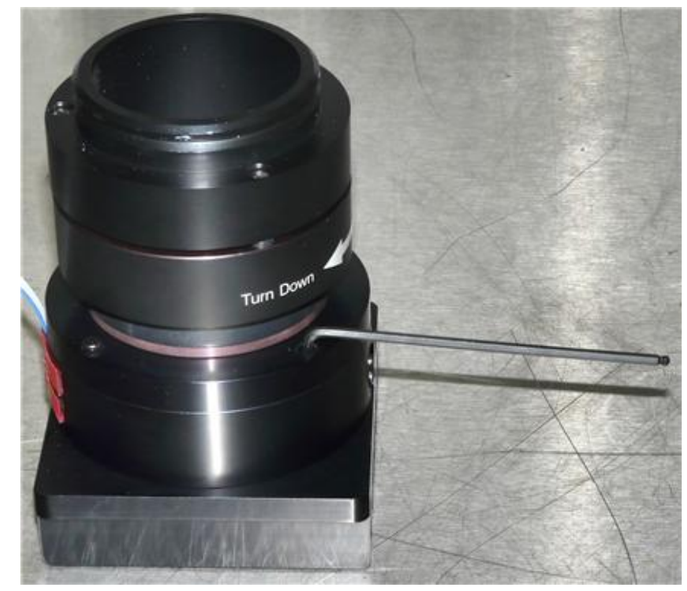

Han-Seung Yang 2/8/2019	
PN 10413 Olympus BX51 Bottom Illuminator System Installation	REV 5
SHEET 5 OF 11	

BX51 Bottom Illuminator Replacement Instructions

Sheet 6: Remove bottom and back cover, disconnect original adjustment pot and cable.

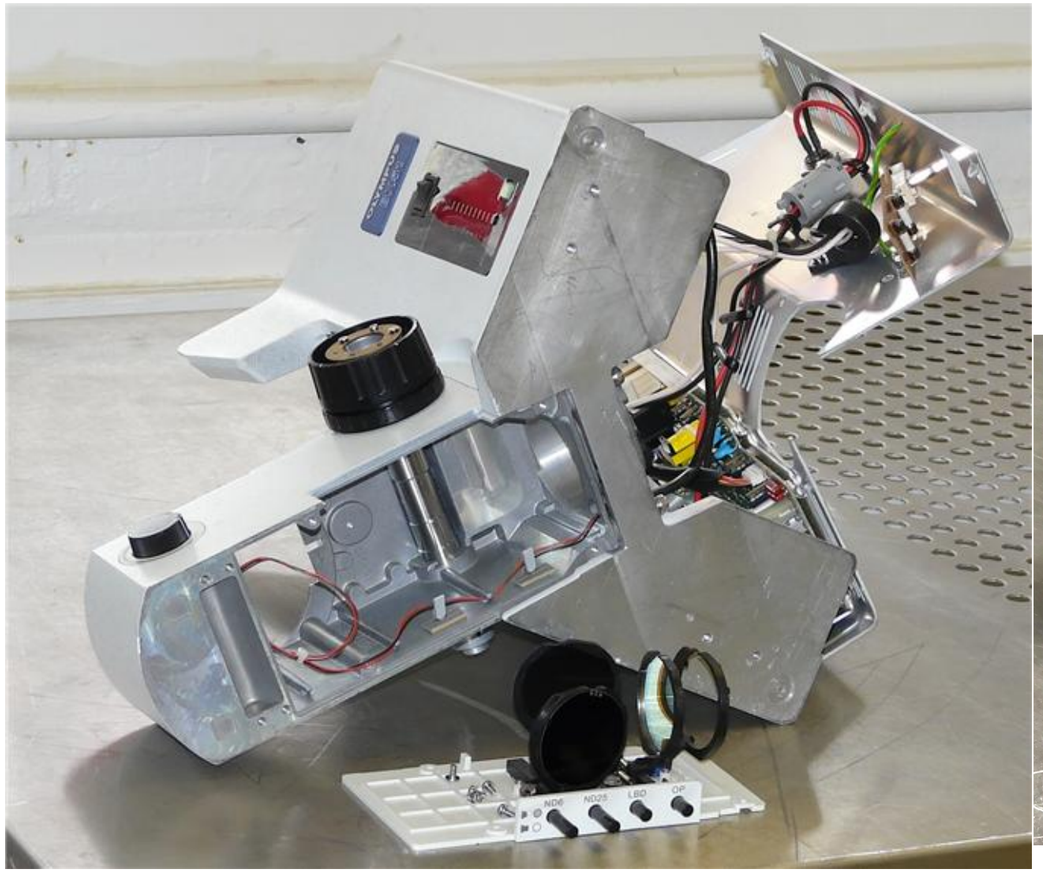

(1) Remove the back and bottom cover of the microscope.

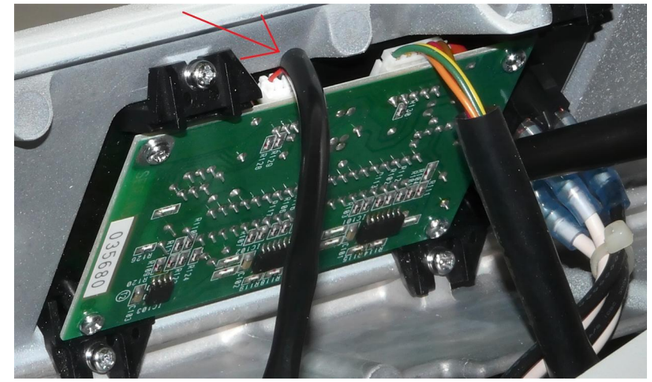

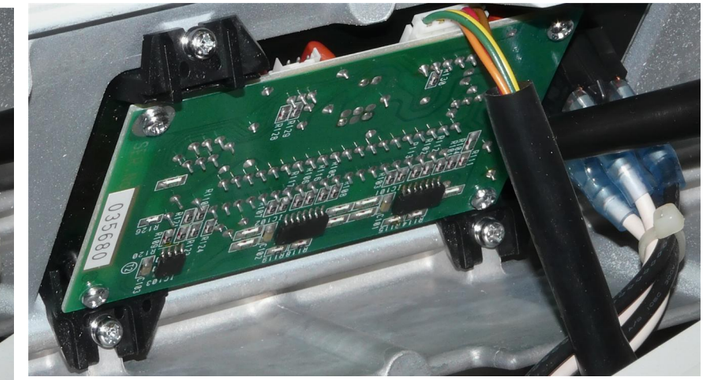

(2) Remove the intensity adjust cable from the PCB as shown above.

(3) Remove the knob from the adjustment pot using the 1.5mm hex key. Then remove the nut holding the pot with an 11mm socket. Remove the pot and the attached cable. It is not neccessary to remove the cable from pot.

Han-Seung Yang	2/8/2019	
PN 10413 Olympus BX51 Bottom Illuminator System Installation		REV 5
	SHEET 6 OF	11

BX51 Bottom Illuminator Replacement Instructions

Sheet 7: Remove bottom and back cover, disconnect original adjustment pot and cable.

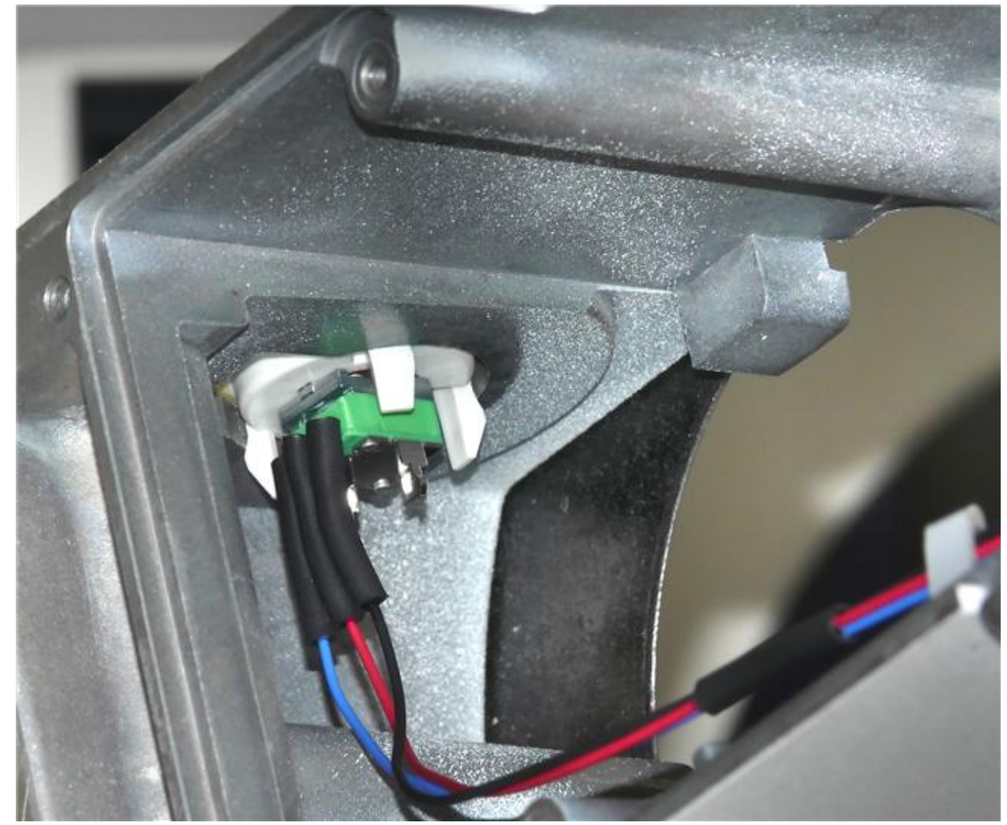

Install the new pot using a 10mm socket to secure the nut. Do not use a washer (there will not be enough thread to properly secure the nut). Route the cable out through the hole in the back of the microscope and secure with the restraint tabs of the microscope as shown above.

Be sure to consult the safety precautions related to the now obsoleted AC power connections on sheet 8 before continuing with the installation on sheet 9.

Han-Seung Yang	2/8/2019	
PN 10413 Olympus BX51 Bottom Illuminator System Installation		REV 5
	SHEET 7 OF	11

BX51 Bottom Illuminator Replacement Instructions

Sheet 8: Safety Warnings

The original 120/220VAC powered illuminator circuitry is completely obsoleted by the Nanodyne equipment which is powered by a universal input wall plug power supply with low voltage DC output.

We recommend completely removing the original power supply circuitry to elliminate any possibility of an electrical or fire hazard in case someone mistakenly connects AC power to the microscope in the future.

AT THE VERY LEAST, remove the power leads (red arrows in photo at right) from the AC input connector. They should be cut short so there is no possibility they could contact the power inlet, or insulated with heat shrink tubing or electrical tape.

For the BX51, the AC power can be disconnected by unplugging the connector from the small printed circuit board attached to the AC input receptacle (which was removed before we got the microscope) See photo at far right.

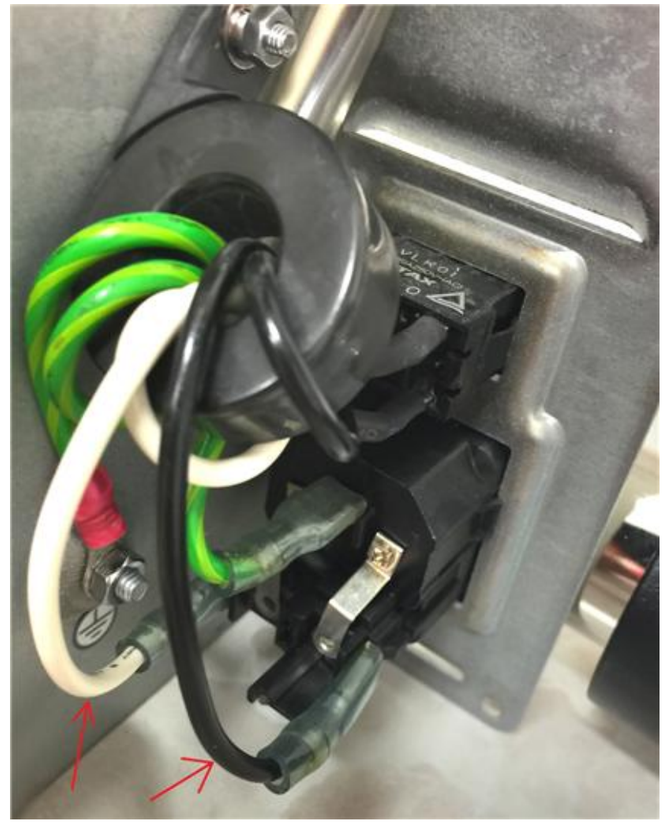

Inside view of obsolete AC power input for BX50. Remove AC power leads shown by arrows. Secure and/insulate to prevent accidental contact with AC terminals.

Inside view of obsolete AC power input for BX51. (The AC input receptacle which would be mounted in the empty circled hole had been removed before we received the microscope) Remove AC power lead connection by disconnecting the socket indicated by the arrow above.

Installing PN 10736 rubber plug in AC recepticle to deter connection of obsolete AC power cord.

Han-Seung Yang	2/8/2019	
PN 10413 Olympus BX51 Bottom Illuminator System Installation		REV 5
	SHEET 8 OF	11

BX51 Bottom Illuminator Replacement Instructions

Sheet 9: Replace back cover, install illuminator.

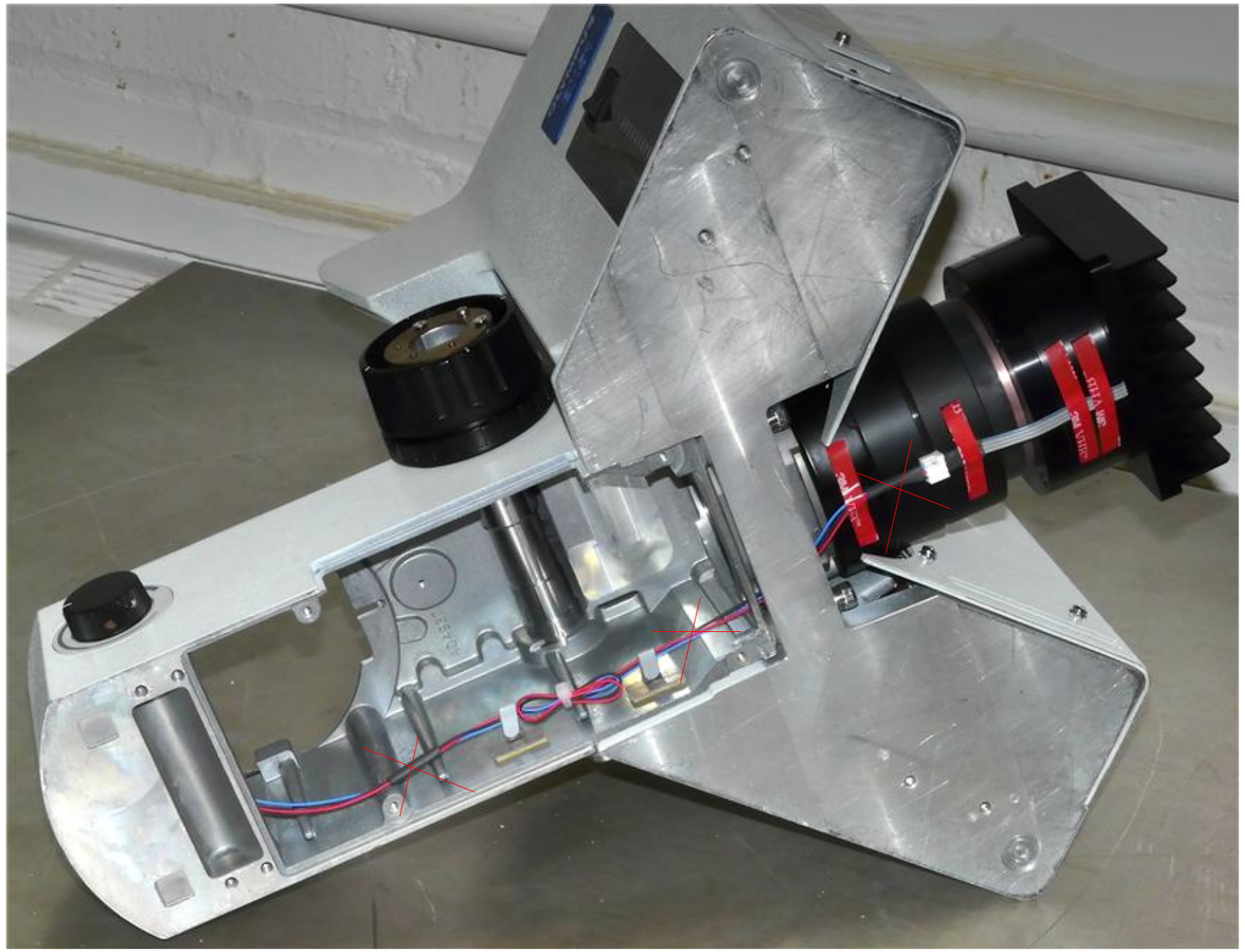

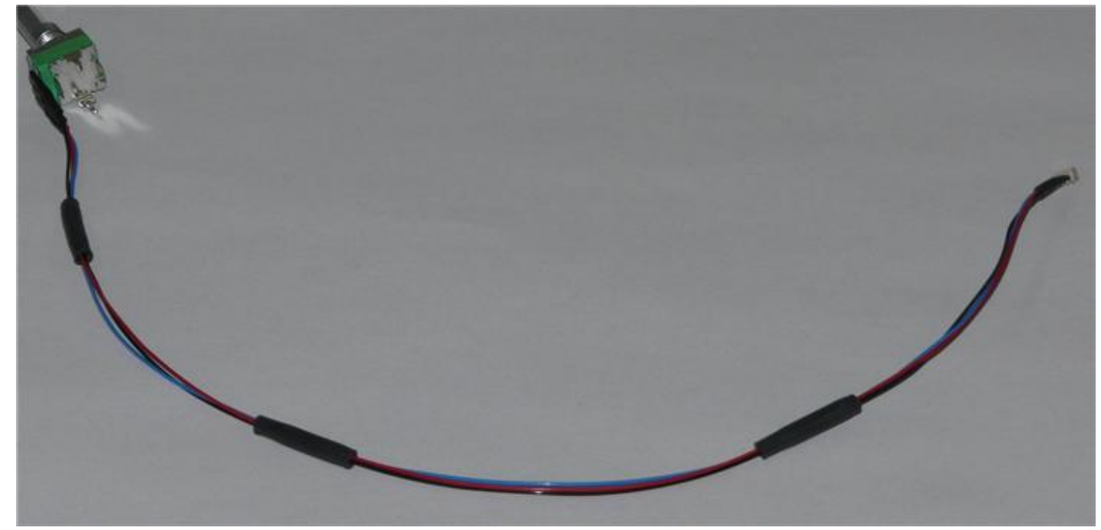

PN 10603 Pot Cable Assembly

Note: Pot Cable assembly (red X) in left image is out dated. We are now using PN 10603 Pot Cable Assy (top right image).

(1) Replace the back cover.

(2) Install the illuminator in the same manner as the original (insert the condenser lens into the recepticle and lock in place with the set screw using the tool provided with the microscope).

(3) Install the knob from the old pot on the new one. Be sure the knob is lifted up slightly so the set screw clamps on the flat of the shaft, to ensure a secure connection.

(4) Connect the pot cable socket to the recepticle of the illuminator as shown in page 10. The connectors are keyed to fit one way only. Secure the cable to the illuminator and condenser lens with tape as shown.

Han-Seung Yang	2/8/2019	
PN 10413 Olympus BX51 Bottom Illuminator System Installation		REV 5
	SHEET 9 OF	11

Connect the plug at the end of the Pot Cable Assembly to the mating socket of the illuminator, as shown in the pictures on this page. NOTE THAT THE PLUG IS KEYED TO ONLY GO INTO THE SOCKET ONE WAY, AS SHOWN.

Partially insert the plug into the mating socket of the illuminator by holding the wire next to the plug with your finger (photo 2).

Use your fingernails, if you have them, or tools like a tiny screwdriver or tweezers pushing on the side of the plug to fully insert it (photo 3).

The socket cannot be fully engaged by pushing on the wires, as the wires would just collapse.

To disconnect it if needed, pull the wire straight out by firmly gripping the black heat shrink tubing.

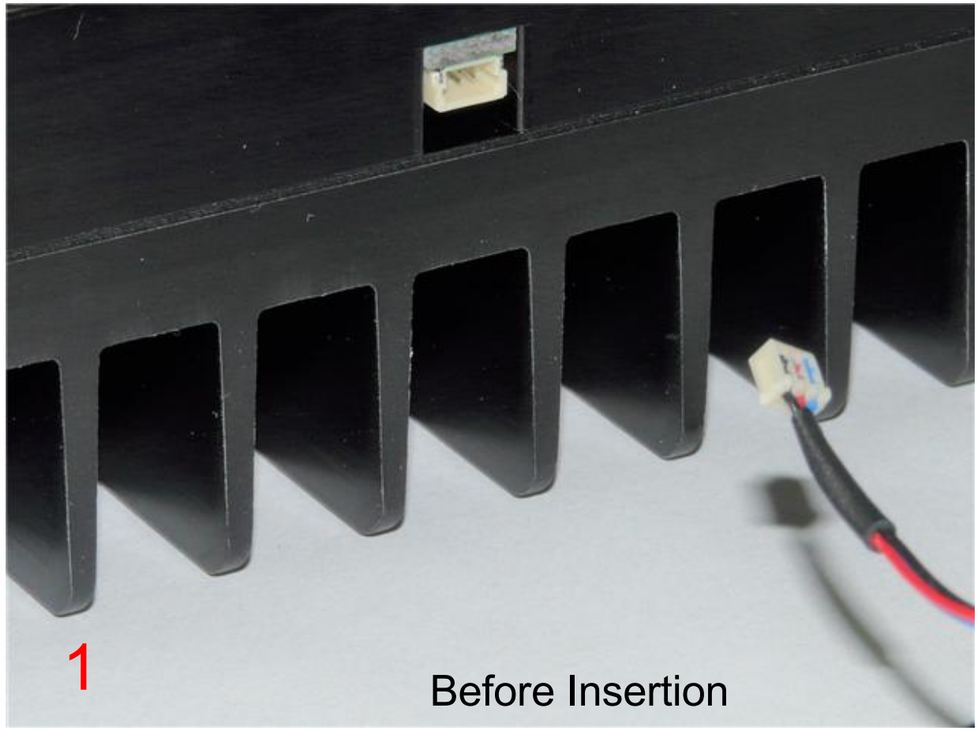

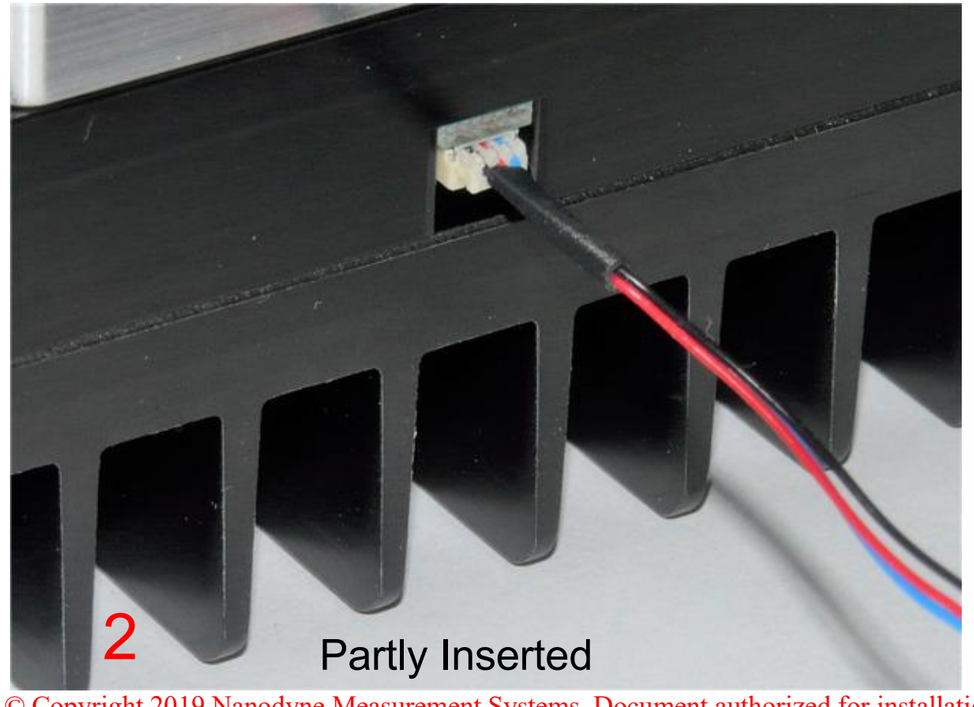

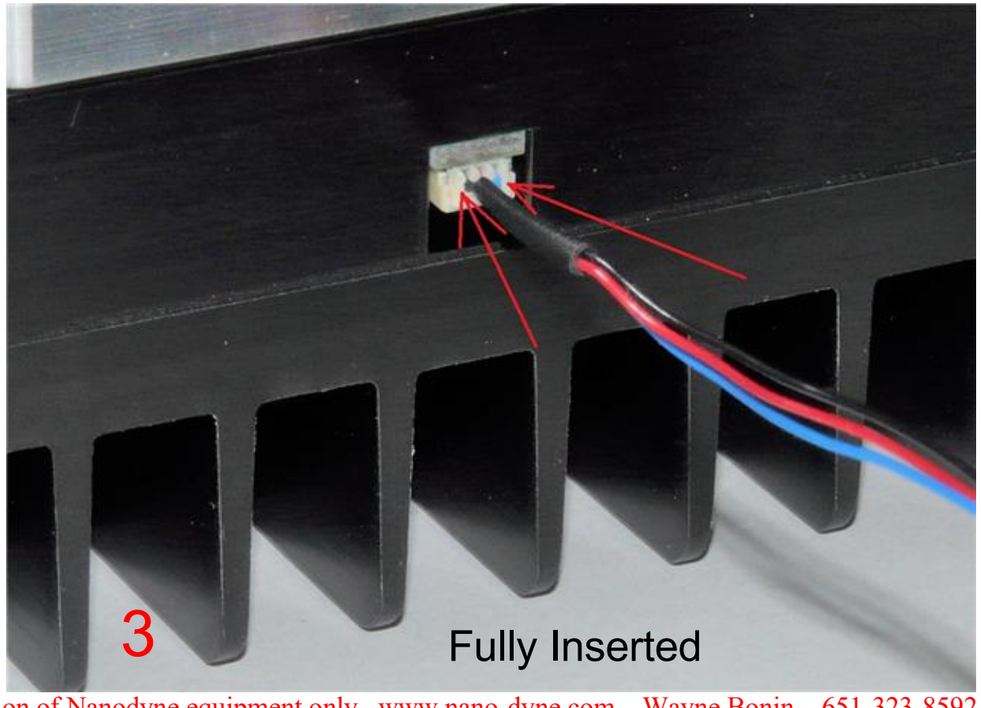

Han-Seung Yang	2/8/2019	
PN 10413 Olympus BX51 Bottom Illuminator System Installation		REV 5
	SHEET 10 OF	11

Bottom Illuminator Replacement Instructions

Sheet 11: Install bottom cover. Installation complete.

Replace the bottom cover, connect the power supply, and the unit is ready to operate.

All intensity control is done by the potentiometer. There is no on/off switch. This is done to increase reliability, as on/off switches often fail sooner than potentiometers.

The power consumption of the illuminator when turned off (potentiometer fully counter clockwise) is significantly less than the no load draw of the power supply. If this is still a concern, the power supply should be connected to a power strip that can be switched off when not in use.

Note that the microscope in the photo is missing its standoff feet (as well as many other parts). With a complete microscope the illuminator will not be in contact with the table.

Han-Seung Yang 2/8/2019	
PN 10413 Olympus BX51 Bottom Illuminator System Installation	REV 5
SHEET 11 OF 11	