Nanodyne Replacement Illuminator for Zeiss Axiophot 2 Microscope: Included Items

The installer will need to provide common hand tools such as screwdrivers, pliers and wire cutters.

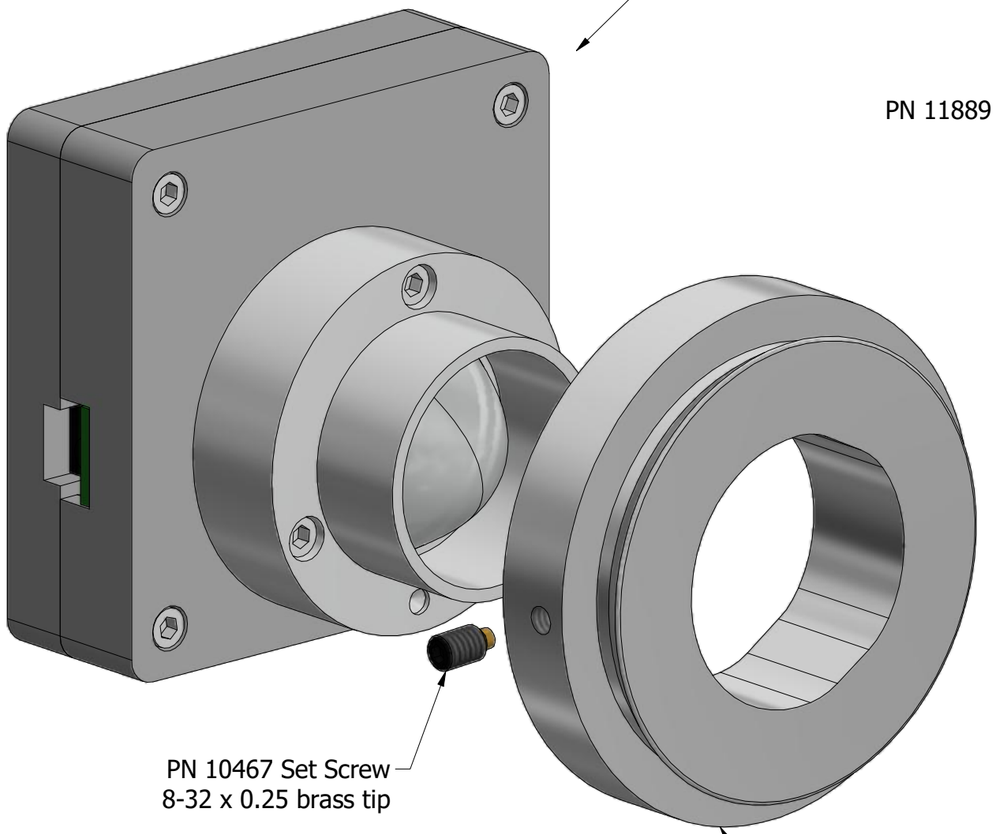

PN 10733 Power Supply - XP Power 5V 1A and PN 10734 Cable Assy 1.35mm ID x 3.5mm OD RA plug to USB A, 6 foot.

The illuminator may be powered by plugging the cable into the power supply provided, or into a suitable USB port on a computer or other device.

Power supplies are subject to substitution without notice due to availability issues and changes in regulations.

PN 10736 Rubber plug to block unused AC power receptacle.

Tape to secure wires.

Han-Seung Yang 1/13/2021	
PN 11892 Zeiss Axiophot 2 illuminator System (low power)	REV 1
SHEET 1 OF 1	

© Copyright 2021 Nanodyne Measurement Systems. Document authorized for installation of Nanodyne equipment only. www.nano-dyne.com Wayne Bonin 651-323-8592